Package Drawing

Designator: K
Type: 4-pin SIP

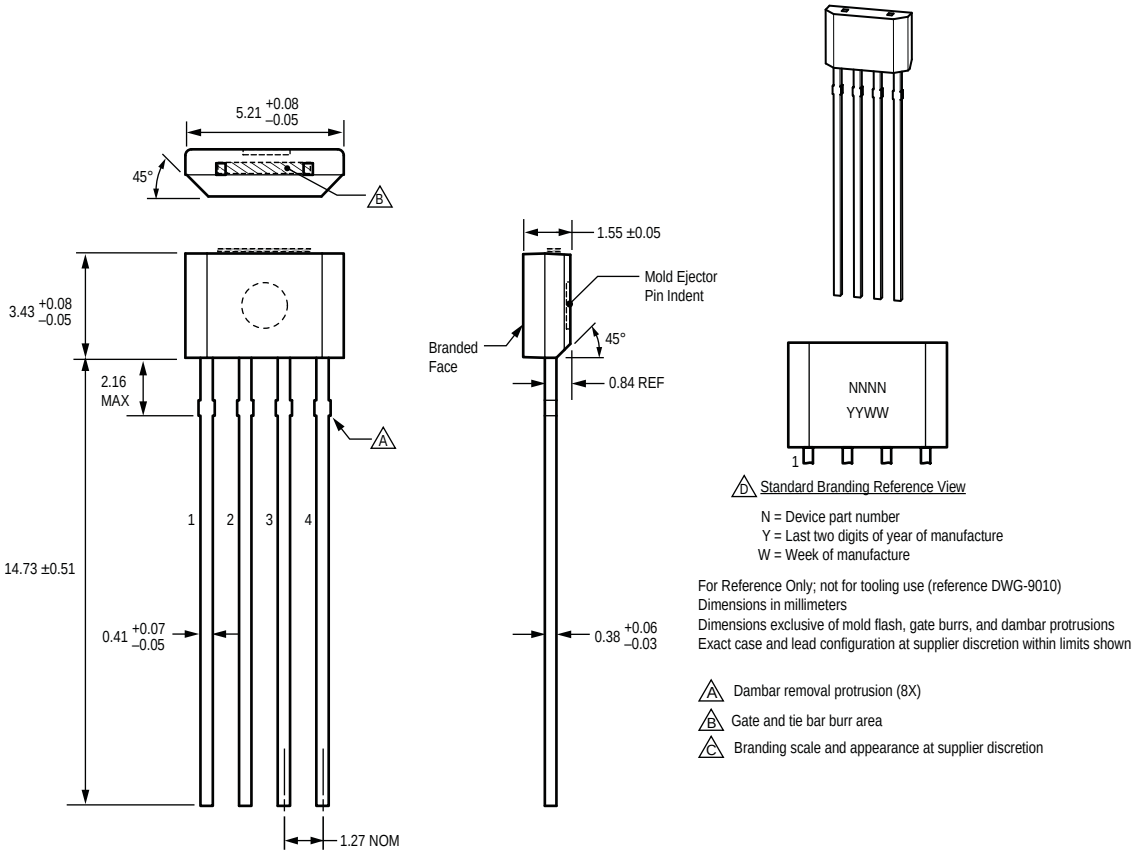

Copyright ©2008-2013, Allegro MicroSystems, LLC drawings are for reference only; not for tooling use. Refer to the individual datasheet for information on a specific product package. Allegro MicroSystems, LLC reserves the right to make, from time to time, such departures from the detail specifications as may be required to permit improvements in the performance, reliability, or manufacturability of its products. Before placing an order, the user is cautioned to verify that the information being relied upon is current. The information included herein is believed to be accurate and reliable. However, Allegro MicroSystems, LLC assumes no responsibility for its use; nor for any infringement of patents or other rights of third parties which may result from its use.

Allegro MicroSystems, LLC
115 Northeast Cutoff
Worcester, Massachusetts 01615-0036 U.S.A.
1.508.853.5000

Package Drawing

Designator: KA

Type: 5-pin SIP

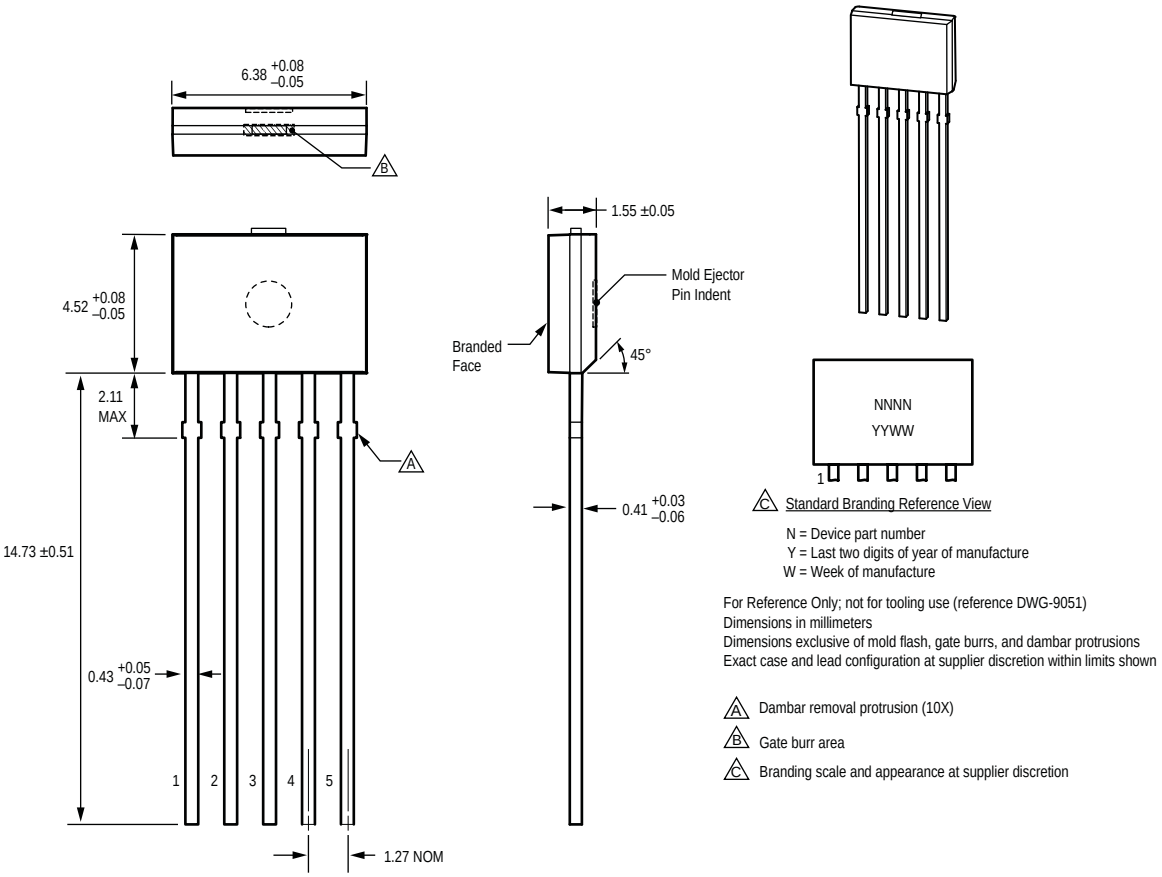

Copyright ©2008-2013, Allegro MicroSystems, LLC drawings are for reference only; not for tooling use. Refer to the individual datasheet for information on a specific product package. Allegro MicroSystems, LLC reserves the right to make, from time to time, such departures from the detail specifications as may be required to permit improvements in the performance, reliability, or manufacturability of its products. Before placing an order, the user is cautioned to verify that the information being relied upon is current. The information included herein is believed to be accurate and reliable. However, Allegro MicroSystems, LLC assumes no responsibility for its use; nor for any infringement of patents or other rights of third parties which may result from its use.

Allegro MicroSystems, LLC
115 Northeast Cutoff
Worcester, Massachusetts 01615-0036 U.S.A.
1.508.853.5000

Package Drawing

Designator: KB

Type: 3-pin SIP

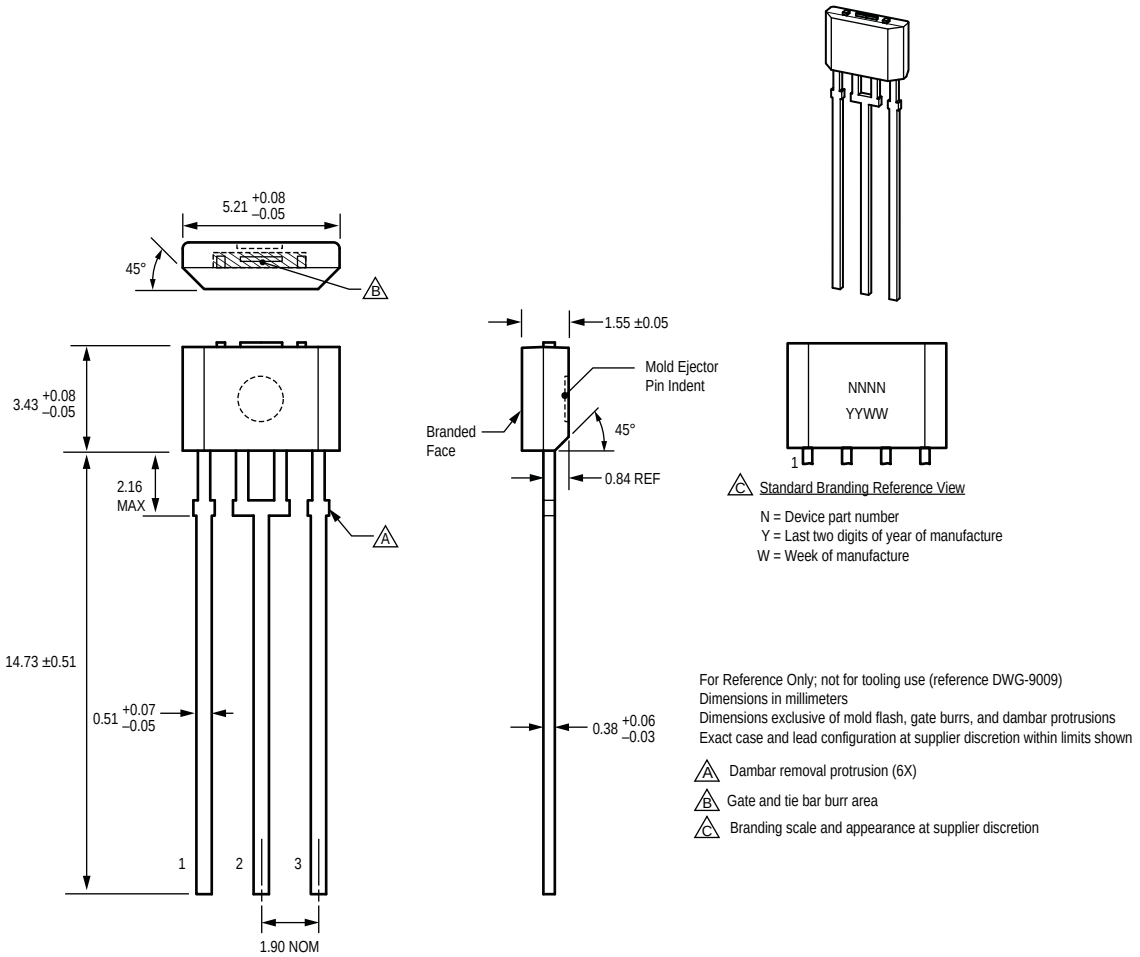

For Reference Only; not for tooling use (reference DWG-9009)
Dimensions in millimeters
Dimensions exclusive of mold flash, gate burrs, and dambar protrusions
Exact case and lead configuration at supplier discretion within limits shown

A Dambar removal protrusion (6X)

B Gate and tie bar burr area

C Branding scale and appearance at supplier discretion

Copyright ©2008-2013, Allegro MicroSystems, LLC drawings are for reference only; not for tooling use. Refer to the individual datasheet for information on a specific product package. Allegro MicroSystems, LLC reserves the right to make, from time to time, such departures from the detail specifications as may be required to permit improvements in the performance, reliability, or manufacturability of its products. Before placing an order, the user is cautioned to verify that the information being relied upon is current. The information included herein is believed to be accurate and reliable. However, Allegro MicroSystems, LLC assumes no responsibility for its use; nor for any infringement of patents or other rights of third parties which may result from its use.

Allegro MicroSystems, LLC
115 Northeast Cutoff
Worcester, Massachusetts 01615-0036 U.S.A.
1.508.853.5000

For the latest version of this document, visit our website:
www.allegromicro.com

Package Drawing

Designator: KN

Type: 4-pin SIP

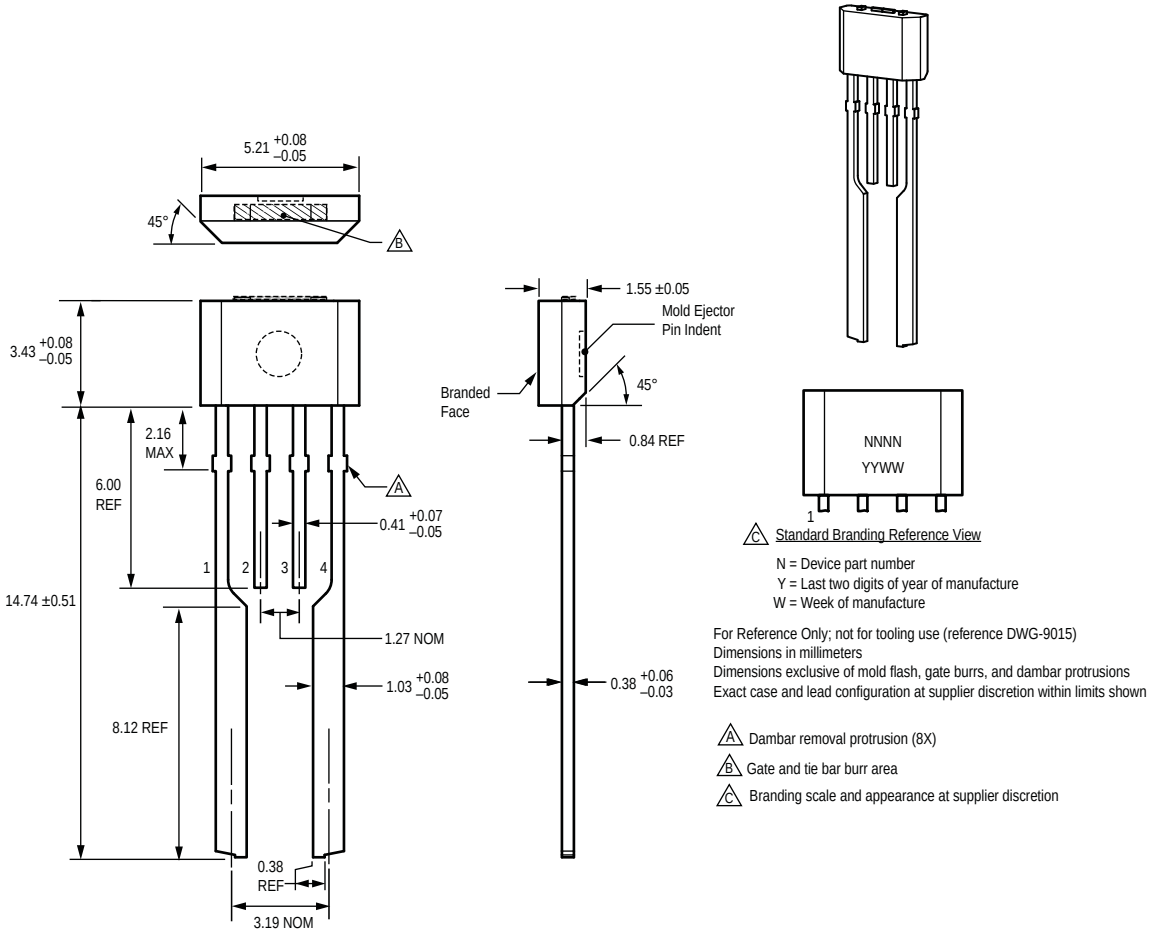

Copyright ©2008-2013, Allegro MicroSystems, LLC drawings are for reference only; not for tooling use. Refer to the individual datasheet for information on a specific product package. Allegro MicroSystems, LLC reserves the right to make, from time to time, such departures from the detail specifications as may be required to permit improvements in the performance, reliability, or manufacturability of its products. Before placing an order, the user is cautioned to verify that the information being relied upon is current. The information included herein is believed to be accurate and reliable. However, Allegro MicroSystems, LLC assumes no responsibility for its use; nor for any infringement of patents or other rights of third parties which may result from its use.

Allegro MicroSystems, LLC
115 Northeast Cutoff
Worcester, Massachusetts 01615-0036 U.S.A.
1.508.853.5000

For the latest version of this document, visit our website:
www.allegromicro.com

Package Drawing

Designator: KT

Type: 4-pin SIP

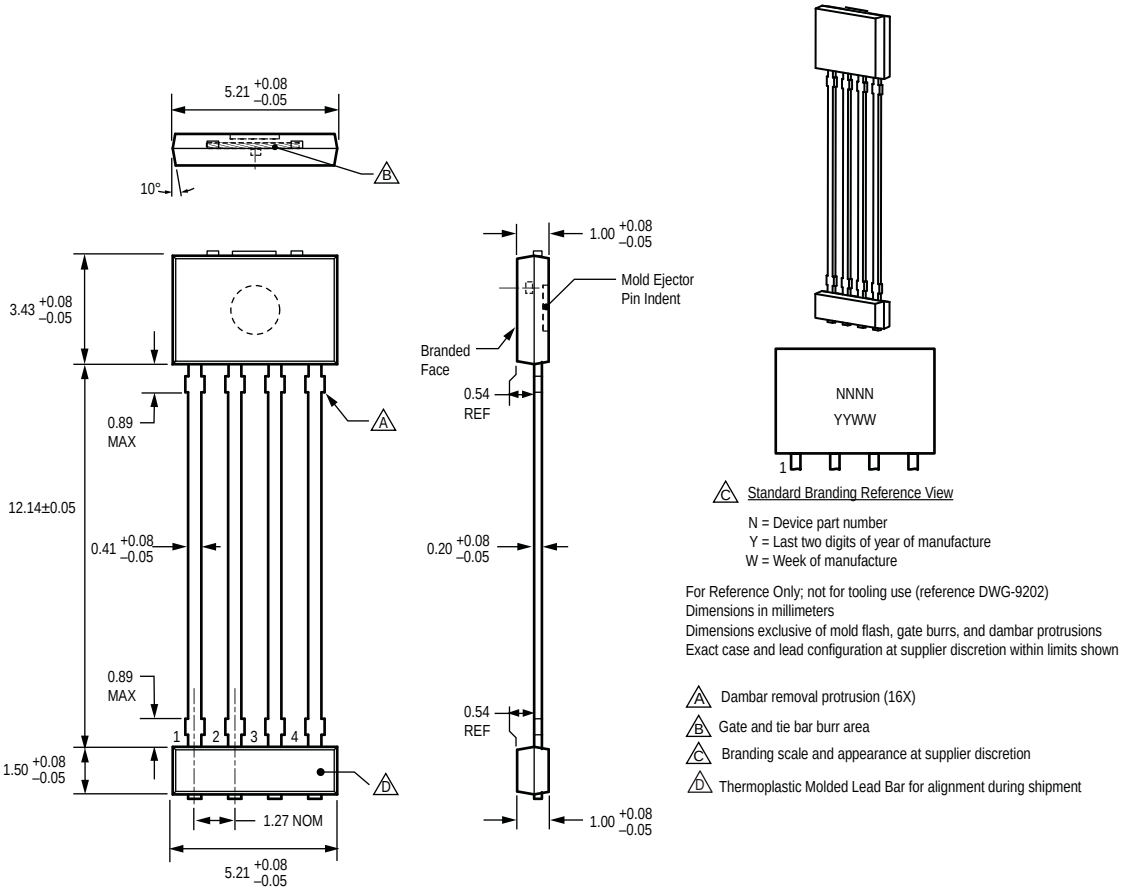

Copyright ©2008-2013, Allegro MicroSystems, LLC drawings are for reference only; not for tooling use. Refer to the individual datasheet for information on a specific product package. Allegro MicroSystems, LLC reserves the right to make, from time to time, such departures from the detail specifications as may be required to permit improvements in the performance, reliability, or manufacturability of its products. Before placing an order, the user is cautioned to verify that the information being relied upon is current. The information included herein is believed to be accurate and reliable. However, Allegro MicroSystems, LLC assumes no responsibility for its use; nor for any infringement of patents or other rights of third parties which may result from its use.

Allegro MicroSystems, LLC
115 Northeast Cutoff
Worcester, Massachusetts 01615-0036 U.S.A.
1.508.853.5000

Package Drawing

Designator: U

Type: 3-pin SIP

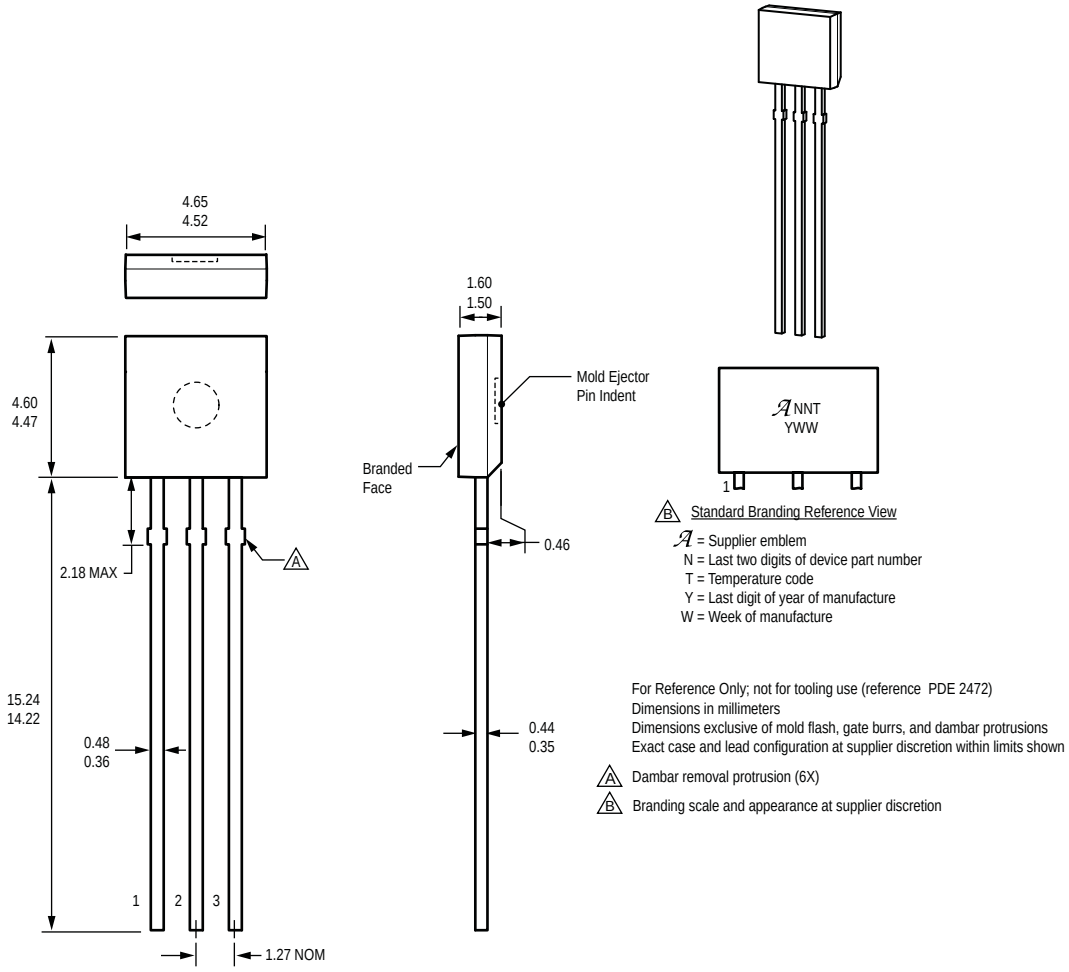

Copyright ©2008-2013, Allegro MicroSystems, LLC drawings are for reference only; not for tooling use. Refer to the individual datasheet for information on a specific product package. Allegro MicroSystems, LLC reserves the right to make, from time to time, such departures from the detail specifications as may be required to permit improvements in the performance, reliability, or manufacturability of its products. Before placing an order, the user is cautioned to verify that the information being relied upon is current. The information included herein is believed to be accurate and reliable. However, Allegro MicroSystems, LLC assumes no responsibility for its use; nor for any infringement of patents or other rights of third parties which may result from its use.

Allegro MicroSystems, LLC
115 Northeast Cutoff
Worcester, Massachusetts 01615-0036 U.S.A.
1.508.853.5000

For the latest version of this document, visit our website:
www.allegromicro.com

Package Drawing

Designator: UA

Type: 3-pin SIP, matrix leadframe

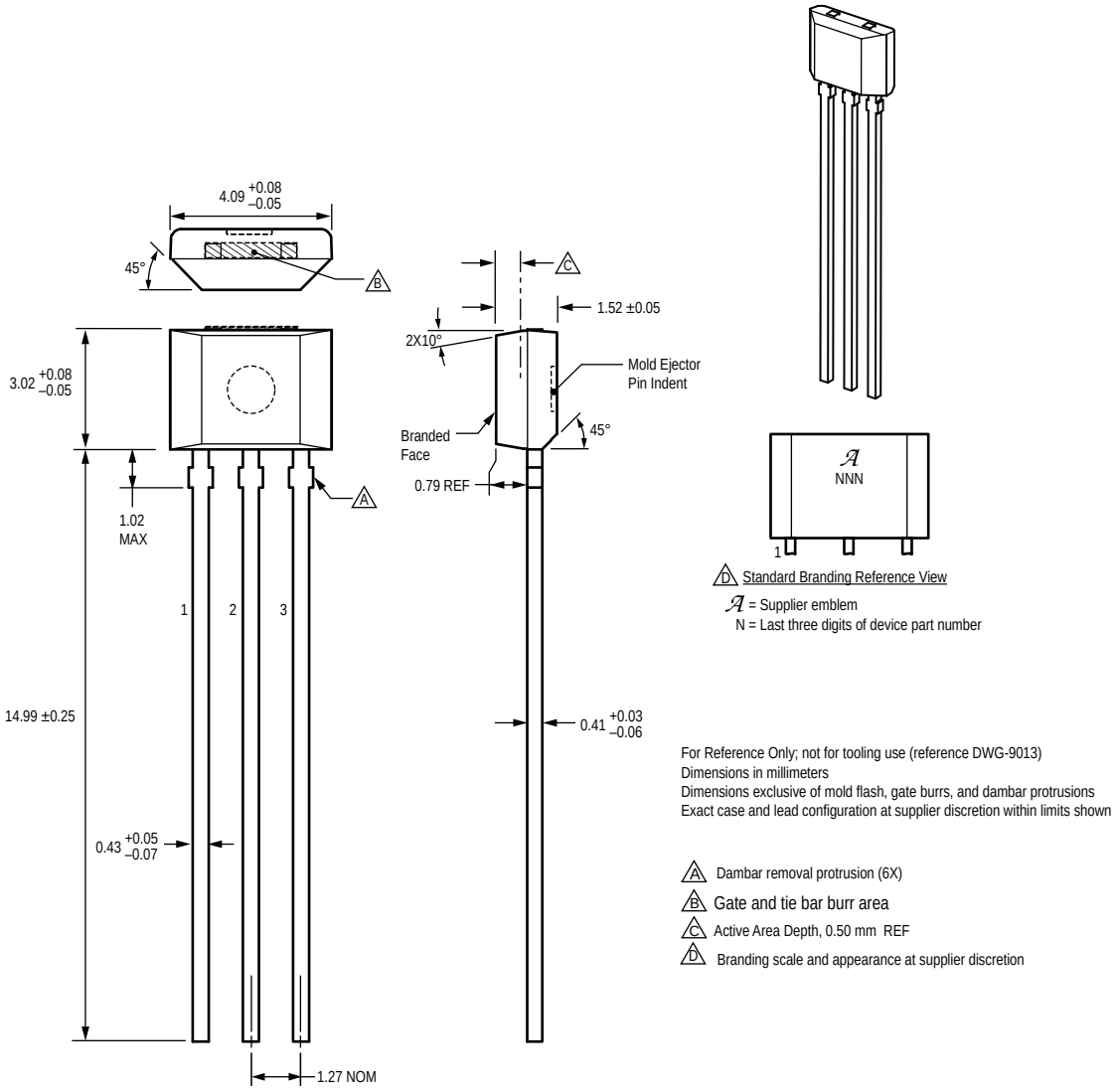

For Reference Only; not for tooling use (reference DWG-9013)
Dimensions in millimeters
Dimensions exclusive of mold flash, gate burrs, and dambar protrusions
Exact case and lead configuration at supplier discretion within limits shown

A Dambar removal protrusion (6X)
B Gate and tie bar burr area
C Active Area Depth, 0.50 mm REF
D Branding scale and appearance at supplier discretion

Copyright ©2008-2013, Allegro MicroSystems, LLC drawings are for reference only; not for tooling use. Refer to the individual datasheet for information on a specific product package. Allegro MicroSystems, LLC reserves the right to make, from time to time, such departures from the detail specifications as may be required to permit improvements in the performance, reliability, or manufacturability of its products. Before placing an order, the user is cautioned to verify that the information being relied upon is current. The information included herein is believed to be accurate and reliable. However, Allegro MicroSystems, LLC assumes no responsibility for its use; nor for any infringement of patents or other rights of third parties which may result from its use.

Allegro MicroSystems, LLC
115 Northeast Cutoff
Worcester, Massachusetts 01615-0036 U.S.A.
1.508.853.5000

For the latest version of this document, visit our website:
www.allegromicro.com

Package Drawing

Designator: UA

Type: 3-pin SIP, conventional leadframe

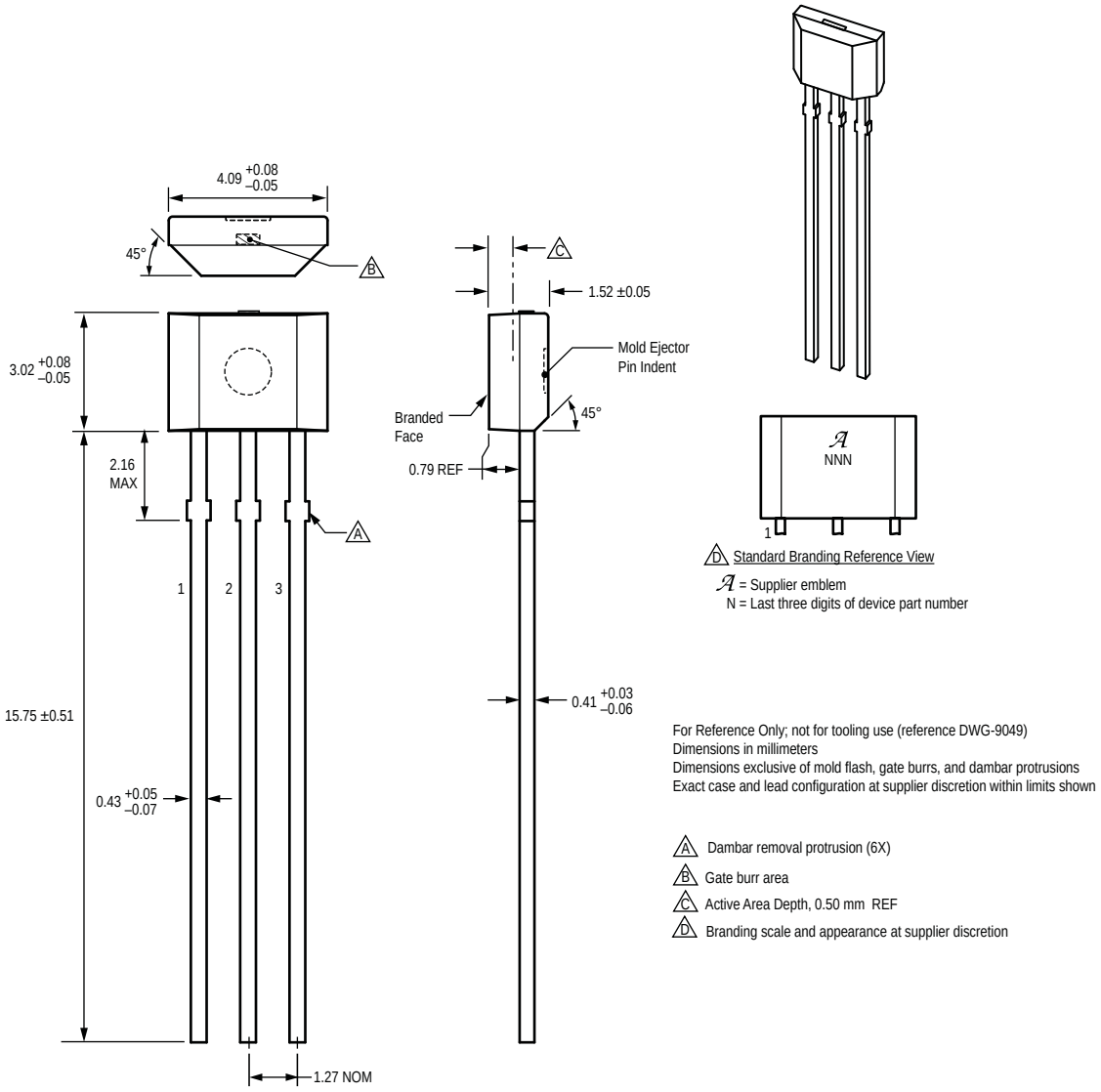

For Reference Only; not for tooling use (reference DWG-9049)
Dimensions in millimeters
Dimensions exclusive of mold flash, gate burrs, and dambar protrusions
Exact case and lead configuration at supplier discretion within limits shown

A Dambar removal protrusion (6X)
B Gate burr area
C Active Area Depth, 0.50 mm REF
D Branding scale and appearance at supplier discretion

Copyright ©2008-2013, Allegro MicroSystems, LLC drawings are for reference only; not for tooling use. Refer to the individual datasheet for information on a specific product package. Allegro MicroSystems, LLC reserves the right to make, from time to time, such departures from the detail specifications as may be required to permit improvements in the performance, reliability, or manufacturability of its products. Before placing an order, the user is cautioned to verify that the information being relied upon is current. The information included herein is believed to be accurate and reliable. However, Allegro MicroSystems, LLC assumes no responsibility for its use; nor for any infringement of patents or other rights of third parties which may result from its use.

Allegro MicroSystems, LLC
115 Northeast Cutoff
Worcester, Massachusetts 01615-0036 U.S.A.
1.508.853.5000

For the latest version of this document, visit our website:
www.allegromicro.com