TMA166G-L

Triac (Bidirectional Triode Thyristor)

Features and Benefits

- Exceptional reliability
- Small SIP package with heatsink mounting for high thermal dissipation and long life
- V_{DRM} of 600 V
- 16 A_{RMS} on-state current
- Uniform switching

Description

This Sanken triac (bidirectional triode thyristor) is designed for AC power control, providing reliable, uniform switching for full-cycle AC applications.

In comparison with other products on the market, the TMA166G-L provides greater peak nonrepetitive off-state voltage, V_{DSM} (700 V). In addition, commutation dv/dt and (dv/dt)c are improved.

Package: 3-pin SIP (TO-220)

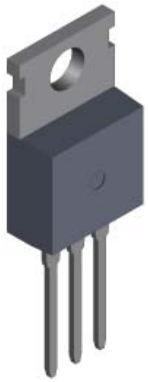

Not to scale

Applications

- Residential and commercial appliances: vacuum cleaners, rice cookers, TVs, home entertainment
- White goods: washing machines
- Office automation power control, photocopiers
- Motor control for small tools
- Temperature control, light dimmers, electric blankets
- General use switching mode power supplies (SMPS)

Typical Applications

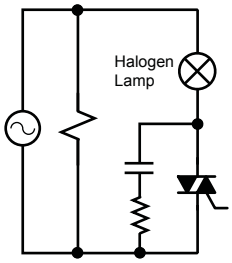

Heater control
(for example, LBP. PPC, MFP)

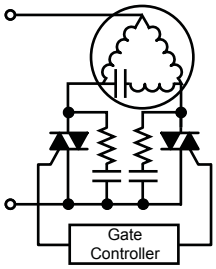

Two-phase motor control
(for example, washing machine)

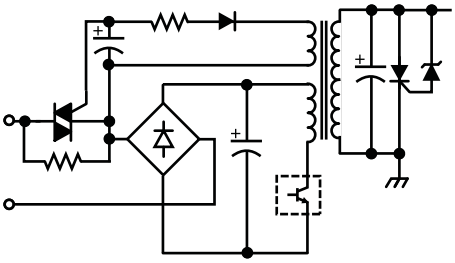

In-rush current control
(for example, SMPS)

Selection Guide

Part Number	Package	Packing
TMA166G-L	3-pin fully molded SIP with heatsink mount	50 pieces per tube

Absolute Maximum Ratings

Characteristic	Symbol	Notes		Rating	Units
Peak Repetitive Off-State Voltage	V_{DRM}	$R_{GREF} = \infty$		600	V
Peak Non-Repetitive Off-State Voltage	V_{DSM}	$R_{GREF} = \infty$		700	V
RMS On-State Current	$I_{T(RMS)}$	50/60 Hz full cycle sine wave, total Conduction angle $(\alpha+) + (\alpha-) = 360°$, $T_C = 100°C$		16	A
Surge On-State Current	I_{TSM}	f = 60 Hz	Full cycle sine wave, peak value, non-repetitive, initial $T_J = 25°C$	168	A
		f = 50 Hz		160	A
I^2t Value for Fusing	I^2t	Value for 50 Hz half cycle sine wave, 1 cycle, $I_{TSM} = 160$ A		128	$A^2 \cdot s$
Critical Rising Rate of On-State Current	di/dt	$I_T = I_{T(RMS)} \times \sqrt{2}$, $V_D = V_{DRM} \times 0.5$, $f \leq 60$ Hz, $t_{gw} \geq 10$ µs, $t_{gr} \leq 250$ ns, $I_{gp} \geq 60$ mA (refer to Gate Trigger Current diagram)		25	A/µs
Peak Gate Current	I_{GM}	f ≥ 50 Hz, duty cycle ≤ 10%		2	A
Peak Gate Power Dissipation	P_{GM}	f ≥ 50 Hz, duty cycle ≤ 10%		5	W
Average Gate Power Dissipation	$P_{GM(AV)}$			0.5	W
Junction Temperature	T_J			–40 to 125	ºC
Storage Temperature	T_{stg}			–40 to 125	ºC

Thermal Characteristics May require derating at maximum conditions

Characteristic	Symbol	Test Conditions	Value	Units
Package Thermal Resistance (Junction to Case)	$R_{\theta JC}$	For AC	1.4	ºC/W

Pin-out Diagram

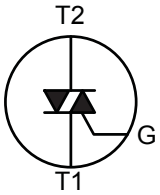

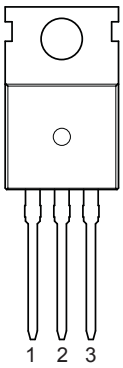

Terminal List Table

Number	Name	Function
1	T1	Main terminal, gate referenced
2	T2	Main terminal connect to signal side
3	G	Gate control

All performance characteristics given are typical values for circuit or system baseline design only and are at the nominal operating voltage and an ambient temperature, T_A, of 25°C, unless otherwise stated.

ELECTRICAL CHARACTERISTICS

Characteristics	Symbol	Test Conditions		Min.	Typ.	Max.	Unit
Off-State Leakage Current	I_{DRM}	$V_D = V_{DRM}$, T_J = 125°C, $R_{GREF} = \infty$ using test circuit 1		–	–	2.0	mA
		$V_D = V_{DRM}$, T_J = 25°C, $R_{GREF} = \infty$ using test circuit 1		–	–	100	µA
On-State Voltage	V_{TM}	I_T = 20 A, T_J = 25°C		–	–	1.45	V
Gate Trigger Voltage	V_{GT}	Quadrant I: T2+, G+	V_D = 12 V, R_L = 20 Ω, T_J = 25°C	–	–	1.5	V
		Quadrant II: T2+, G–		–	–	1.5	V
		Quadrant III: T2–, G–		–	–	1.5	V
Gate Trigger Current	I_{GT}	Quadrant I: T2+, G+	V_D = 12 V, R_L = 20 Ω, T_J = 25°C	–	–	30	mA
		Quadrant II: T2+, G–		–	–	30	mA
		Quadrant III: T2–, G–		–	–	30	mA
Gate Non-trigger Voltage	V_{GD}	$V_D = V_{DRM} \times 0.5$, R_L = 4 kΩ, T_J = 125°C		0.2	–	–	V
Critical Rising Rate of Off-State Voltage during Commutation*	(dv/dt)c	V_D = 400 V, (di/dt)c = –8 A/ms, I_{TP} = 2 A, T_J = 125°C		10	–	–	V/µs
Critical Rising Rate of Off-StateVoltage	dv/dt	$V_D = V_{DRM} \times 0.66$, $R_{GREF} = \infty$ using test circuit 1, T_J = 125°C		200	–	–	V/µs

*Where I_{TP} is the peak current through T2 to T1.

Test Circuit 1

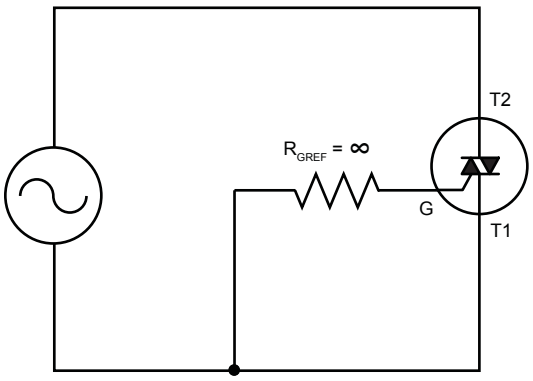

Gate Trigger Characteristics

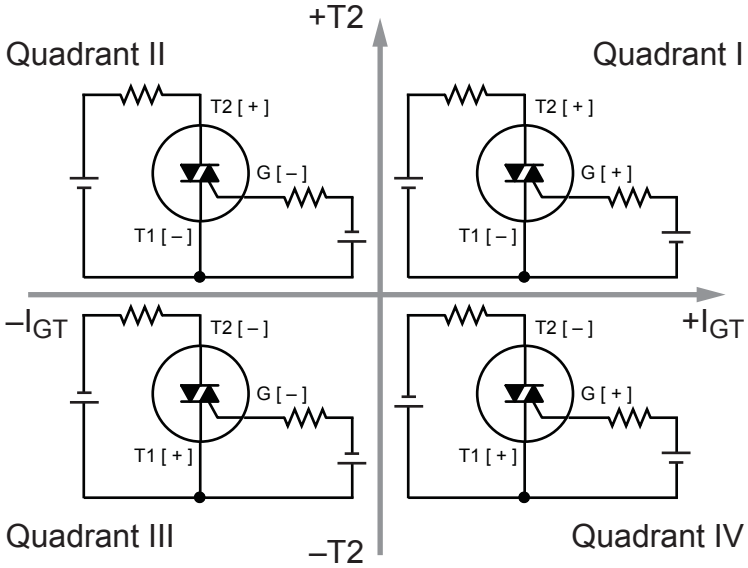

Polarities referenced to T1

Gate Trigger Current

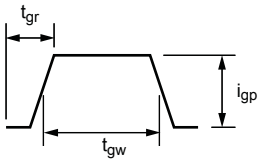

Commutation Timing Diagrams

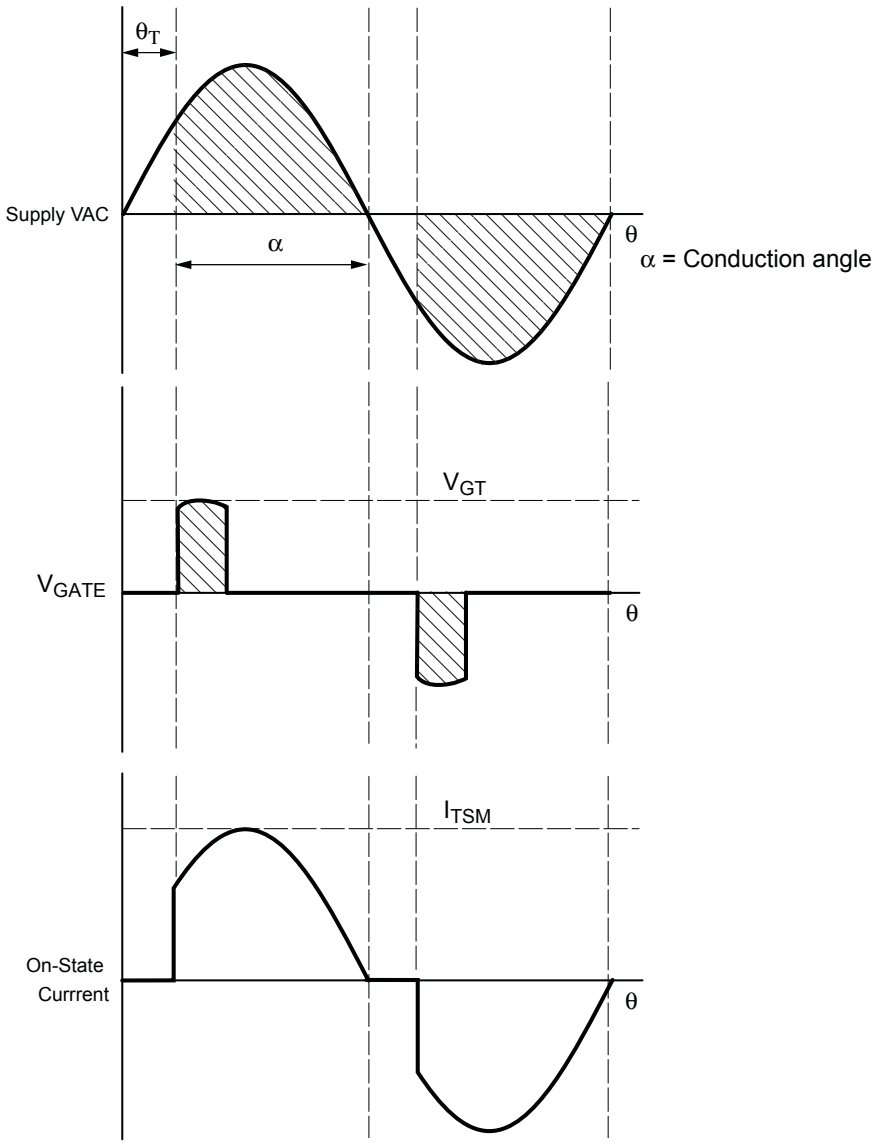

Performance Characteristics at T_A = 25°C

Maximum On-State Current versus Maximum On-State Voltage

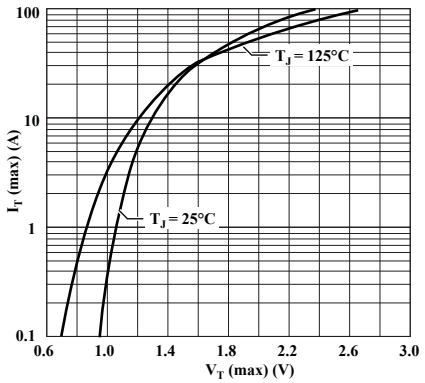

Surge On-State Current versus Quantity of Cycles

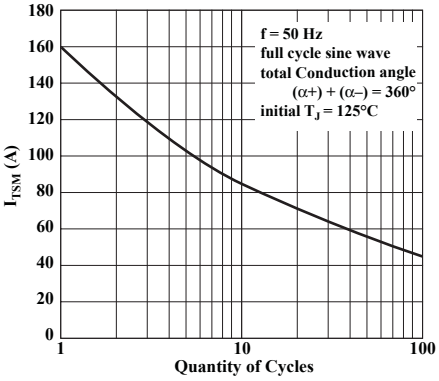

On-State Average Power Dissipation versus Maximum On-State RMS Current

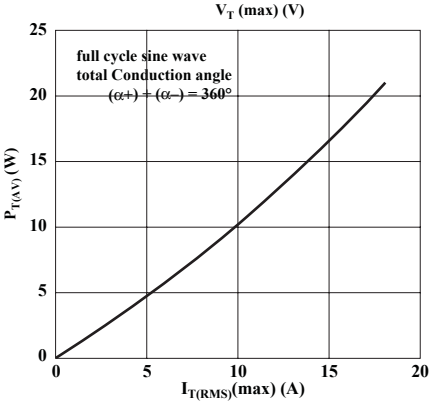

Case Temperature versus On-State RMS Current

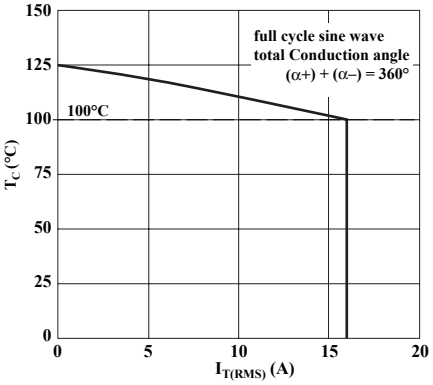

Gate Voltage versus Gate Current

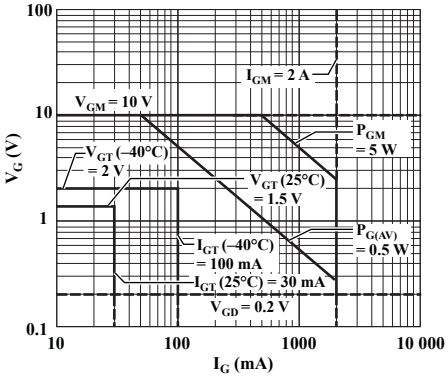

Proportional Change of Typical Trigger Voltage versus Junction Temperature

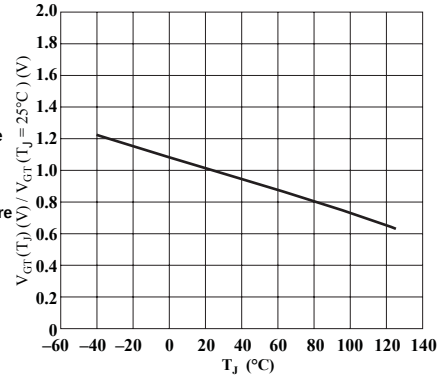

Proportional Change of Typical Trigger Current versus Junction Temperature

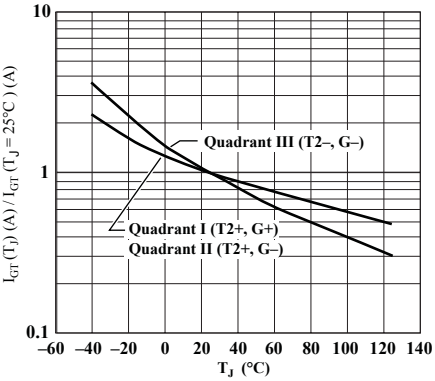

Proportional Change of Typical Holding Current versus Junction Temperature

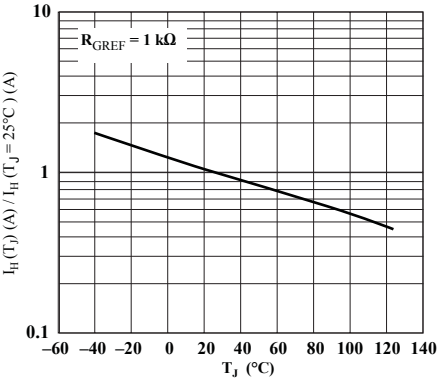

Transient Thermal Impedence versus Triac Voltage Pulse Duration

For AC

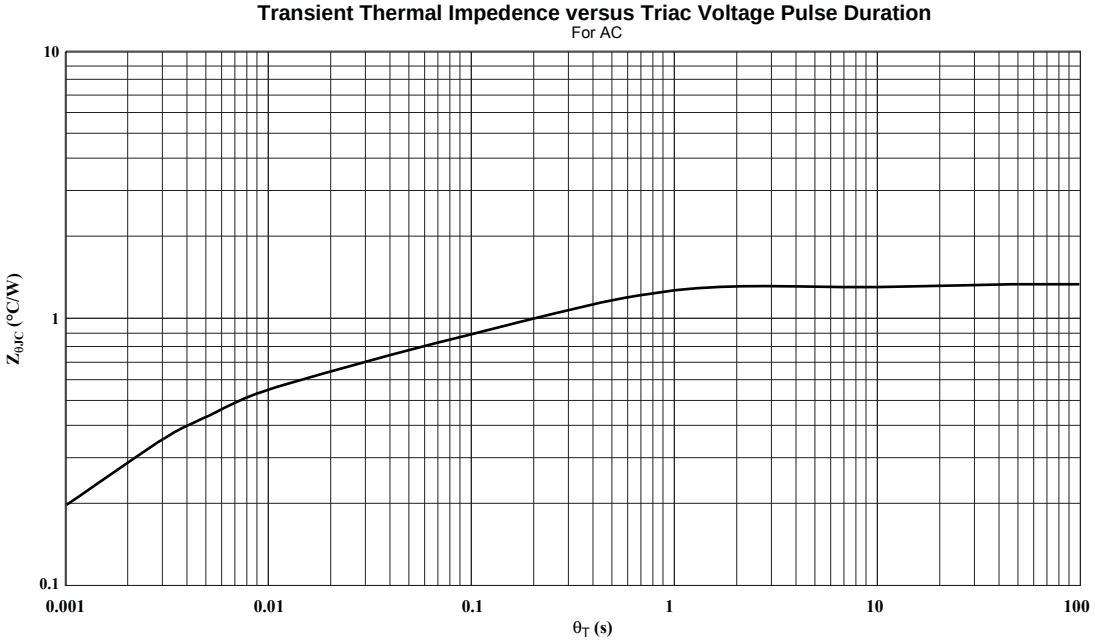

TO-220 Package Outline Drawing

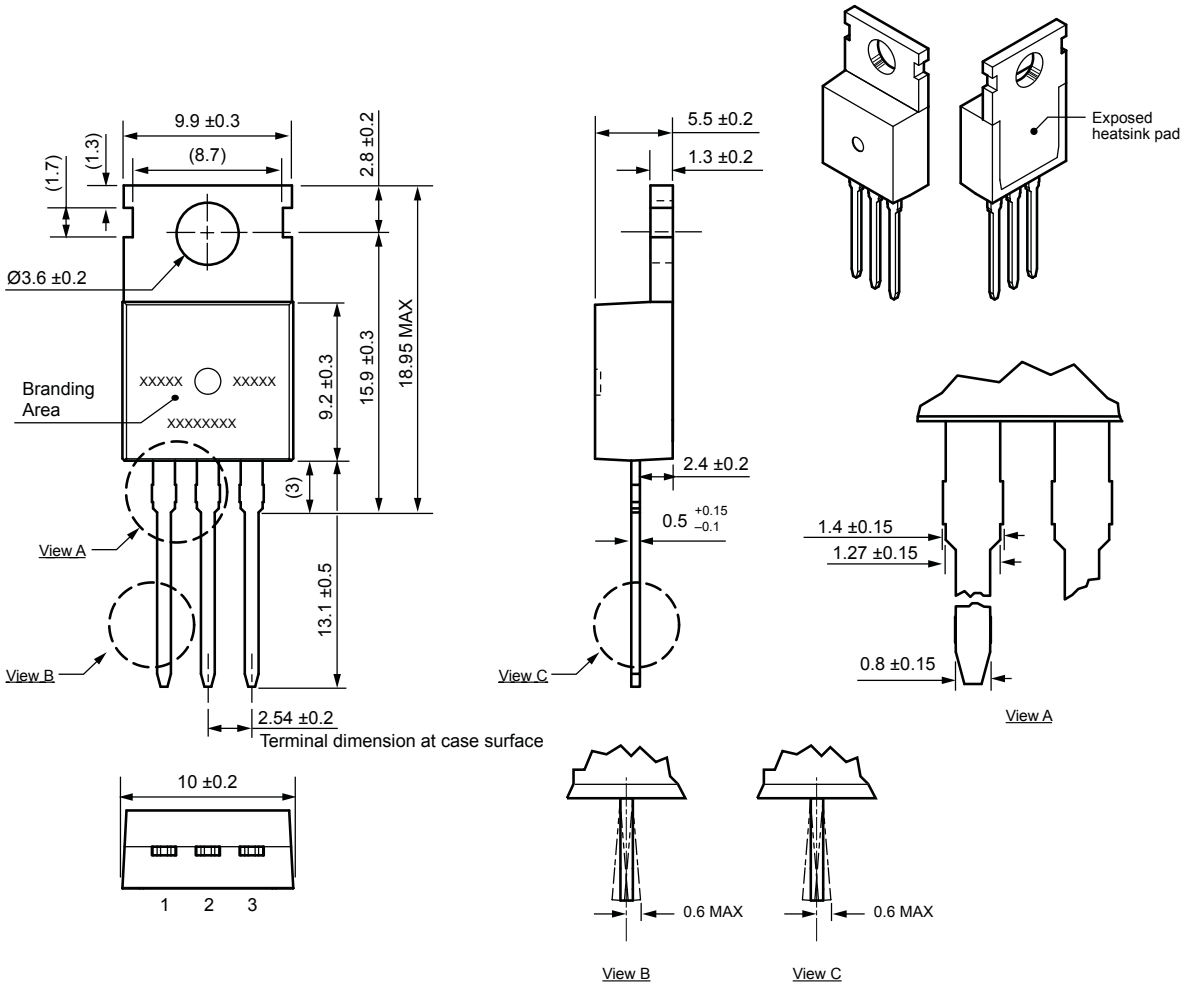

Terminal core material: Cu
Terminal treatment: Sn plating
Package: TO-220

Dimensions in millimeters

Branding codes (exact appearance at manufacturer discretion):
1st line left, lot: *YM*
Where: Y is the last digit of the year of manufacture
M is the month (*1* to *9, O, N, D*)
1st line right, lot: *DDR*
Where: DD is the date
R is a tracking letter
2nd line, type: MA166G

Leadframe plating Pb-free. Device meets RoHS requirements.

Packing Specification

Tube Packing

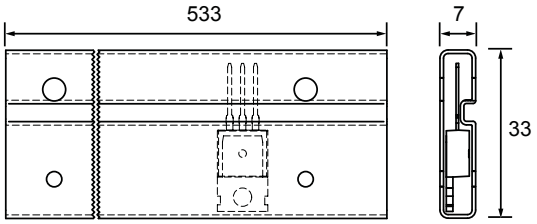

50 pieces per tube
20 tubes per layer
1 layer per inner carton
1000 pieces per inner carton

4 inner cartons per outer carton
4000 pieces per outer carton

Dimensions in millimeters

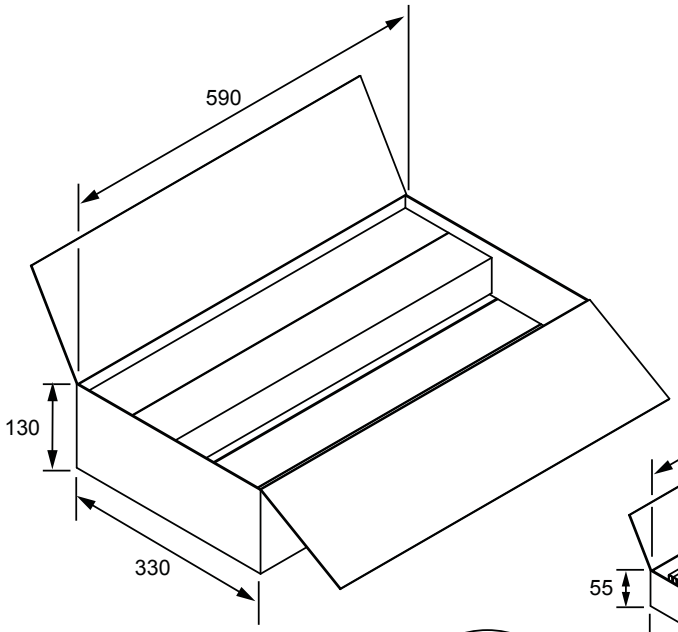

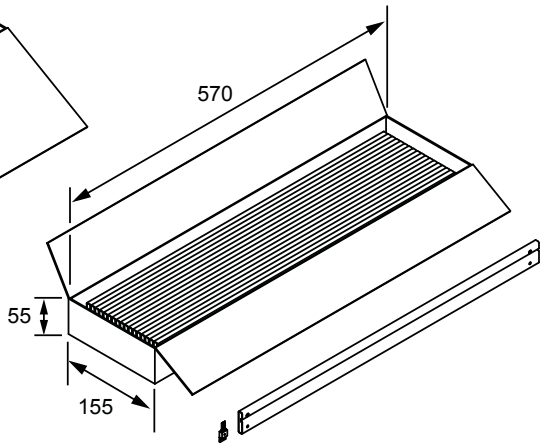

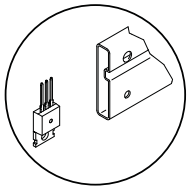

WARNING — These devices are designed to be operated at lethal voltages and energy levels. Circuit designs that embody these components must conform with applicable safety requirements. Precautions must be taken to prevent accidental contact with power-line potentials. Do not connect grounded test equipment.

The use of an isolation transformer is recommended during circuit development and breadboarding.

Because reliability can be affected adversely by improper storage environments and handling methods, please observe the following cautions.

Cautions for Storage

- Ensure that storage conditions comply with the standard temperature (5°C to 35°C) and the standard relative humidity (approximately 40% to 75%); avoid storage locations that experience extreme changes in temperature or humidity.
- Avoid locations where dust or harmful gases are present and avoid direct sunlight.
- Reinspect for rust on leads and solderability of products that have been stored for a long time.

Cautions for Testing and Handling

When tests are carried out during inspection testing and other standard test periods, protect the products from power surges from the testing device, shorts between adjacent products, and shorts to the heatsink.

Remarks About Using Silicone Grease with a Heatsink

- When silicone grease is used in mounting this product on a heatsink, it shall be applied evenly and thinly. If more silicone grease than required is applied, it may produce stress.
- Coat the back surface of the product and both surfaces of the insulating plate to improve heat transfer between the product and the heatsink.
- Volatile-type silicone greases may permeate the product and produce cracks after long periods of time, resulting in reduced heat radiation effect, and possibly shortening the lifetime of the product.
- Our recommended silicone greases for heat radiation purposes, which will not cause any adverse effect on the product life, are indicated below:

Type	Suppliers
G746	Shin-Etsu Chemical Co., Ltd.
YG6260	Momentive Performance Materials
SC102	Dow Corning Toray Silicone Co., Ltd.

Heatsink Mounting Method

- Torque When Tightening Mounting Screws. Thermal resistance increases when tightening torque is low, and radiation effects are decreased. When the torque is too high, the screw can strip, the heatsink can be deformed, and distortion can arise in the product frame. To avoid these problems, observe the recommended tightening torques for this product package type 0.490 to 0.686 N•m (5 to 7 kgf•cm).
- For effective heat transfer, the contact area between the product and the heatsink should be free from burrs and metal fragments, and the heatsink should be flat and large enough to contact over the entire side of the product, including mounting flange and exposed thermal pad.
- The mounting hole in customer-supplied heatsink must be less than Ø4 mm; this includes the diameter of any dimple around punched holes. This is to prevent possible deflection and cracking of the product case when fastened to the heatsink.

Soldering

- When soldering the products, please be sure to minimize the working time, within the following limits:
  260°C 10 s
  350°C 3 s
- Soldering iron should be at a distance of at least 1.5 mm from the body of the products

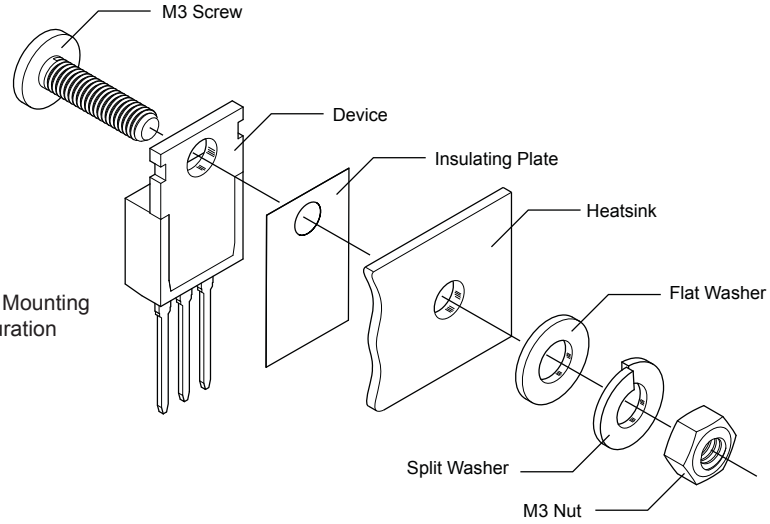

Typical Mounting Configuration

The products described herein are manufactured in Japan by Sanken Electric Co., Ltd. for sale by Allegro MicroSystems, Inc.

Sanken and Allegro reserve the right to make, from time to time, such departures from the detail specifications as may be required to permit improvements in the performance, reliability, or manufacturability of its products. Therefore, the user is cautioned to verify that the information in this publication is current before placing any order.

When using the products described herein, the applicability and suitability of such products for the intended purpose shall be reviewed at the users responsibility.

Although Sanken undertakes to enhance the quality and reliability of its products, the occurrence of failure and defect of semiconductor products at a certain rate is inevitable.

Users of Sanken products are requested to take, at their own risk, preventative measures including safety design of the equipment or systems against any possible injury, death, fires or damages to society due to device failure or malfunction.

Sanken products listed in this publication are designed and intended for use as components in general-purpose electronic equipment or apparatus (home appliances, office equipment, telecommunication equipment, measuring equipment, etc.). Their use in any application requiring radiation hardness assurance (e.g., aerospace equipment) is not supported.

When considering the use of Sanken products in applications where higher reliability is required (transportation equipment and its control systems or equipment, fire- or burglar-alarm systems, various safety devices, etc.), contact a company sales representative to discuss and obtain written confirmation of your specifications.

The use of Sanken products without the written consent of Sanken in applications where extremely high reliability is required (aerospace equipment, nuclear power-control stations, life-support systems, etc.) is strictly prohibited.

The information included herein is believed to be accurate and reliable. Application and operation examples described in this publication are given for reference only and Sanken and Allegro assume no responsibility for any infringement of industrial property rights, intellectual property rights, or any other rights of Sanken or Allegro or any third party that may result from its use.

Anti radioactive ray design is not considered for the products listed herein.

The contents in this document must not be transcribed or copied without Sanken's written consent.

Copyright © 2009 Allegro MicroSystems, Inc.
This datasheet is based on Sanken datasheet SSE-24371

Worldwide Contacts

Asia-Pacific

China

Sanken Electric Hong Kong Co., Ltd.
Suite 1026, Ocean Centre
Canton Road, Tsimshatsui
Kowloon, Hong Kong
Tel: 852-2735-5262, Fax: 852-2735-5494

Sanken Electric (Shanghai) Co., Ltd.
Room 3202, Maxdo Centre
Xingyi Road 8, Changning District
Shanghai, China
Tel: 86-21-5208-1177, Fax: 86-21-5208-1757

Taiwan Sanken Electric Co., Ltd.
Room 1801, 18th Floor
88 Jung Shiau East Road, Sec. 2
Taipei 100, Taiwan R.O.C.
Tel: 886-2-2356-8161, Fax: 886-2-2356-8261

Japan

Sanken Electric Co., Ltd.
Overseas Sales Headquarters
Metropolitan Plaza Building
1-11-1 Nishi-Ikebukuro, Toshima-ku
Tokyo 171-0021, Japan
Tel: 81-3-3986-6164, Fax: 81-3-3986-8637

Korea

Sanken Electric Korea Co., Ltd.
Samsung Life Yeouido Building 16F
23-10, Yeouido-Dong, Yeongdeungpo-gu
Seoul 150-734, Korea
Tel: 82-2-714-3700, Fax: 82-2-3272-2145

Singapore

Sanken Electric Singapore Pte. Ltd.
150 Beach Road, #14-03 The Gateway West
Singapore 189720
Tel: 65-6291-4755, Fax: 65-6297-1744

Europe

Sanken Power Systems (UK) Limited
Pencoed Technology Park
Pencoed, Bridgend CF35 5HY, United Kingdom
Tel: 44-1656-869-100, Fax: 44-1656-869-162

North America

United States

Allegro MicroSystems, Inc.
115 Northeast Cutoff
Worcester, Massachusetts 01606, U.S.A.
Tel: 1-508-853-5000, Fax: 1-508-853-7895

Allegro MicroSystems, Inc.
14 Hughes Street, Suite B105
Irvine, California 92618, U.S.A.
Tel: 1-949-460-2003, Fax: 1-949-460-7837