LC5525F

Single-Stage Power Factor Corrected Off-Line Switching Regulator IC

Features and Benefits

- Integrated on-time control circuit (it realizes high power factor by average current control)
- Integrated startup circuit (no external startup circuit necessary)
- Integrated soft-start circuit (reduces power stress during start-up on the incorporated power MOSFET and output rectifier)
- Integrated bias assist circuit (improves startup performance, suppresses VCC voltage droop during operation, and allows use of low-rated ceramic capacitor on VCC pin)
- Integrated Leading Edge Blanking (LEB) circuit
- Integrated maximum on-time limit circuit
- Protection features:
  - Overcurrent protection (OCP): pulse-by-pulse
  - Overvoltage protection (OVP): pins VCC, OVP, and OCP, auto restart
  - Overload protection (OLP): auto restart
  - Thermal shutdown (TSD): latched shutdown

Package: 7-pin TO-220F

Not to scale

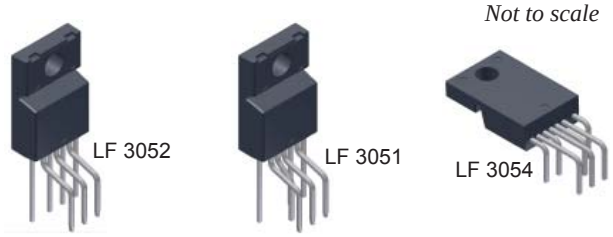

Description

The LC5500 series is the power IC for the LED driver which has an incorporated power MOSFET, designed for input capacitorless applications, and making it possible for systems to comply with the harmonics standard (IEC61000-3-2 class C). The controller adapts the average current control method for realizing high power factors, and the quasi-resonant topology contributes to high efficiency and low EMI noise.

The rich set of protection features helps to realize low component counts, and high performance-to-cost power supply.

The LC5525F is intended for isolated designs. The incorporated MOSFET has a V_{DSS}(min) rating of 650 V and $R_{DS(on)}$(max) of 1.1 Ω. It is capable of a maximum output power of 80 W on 230 VAC supply and 55 W on universal input supply (85 to 265VAC), based on the thermal rating. Note that the maximum output power can be up to 120% to 140% of this value. However, it may be limited in applications with low output voltage or short duty cycle.

Applications

- LED lighting fixtures
- LED light bulbs

Typical Application

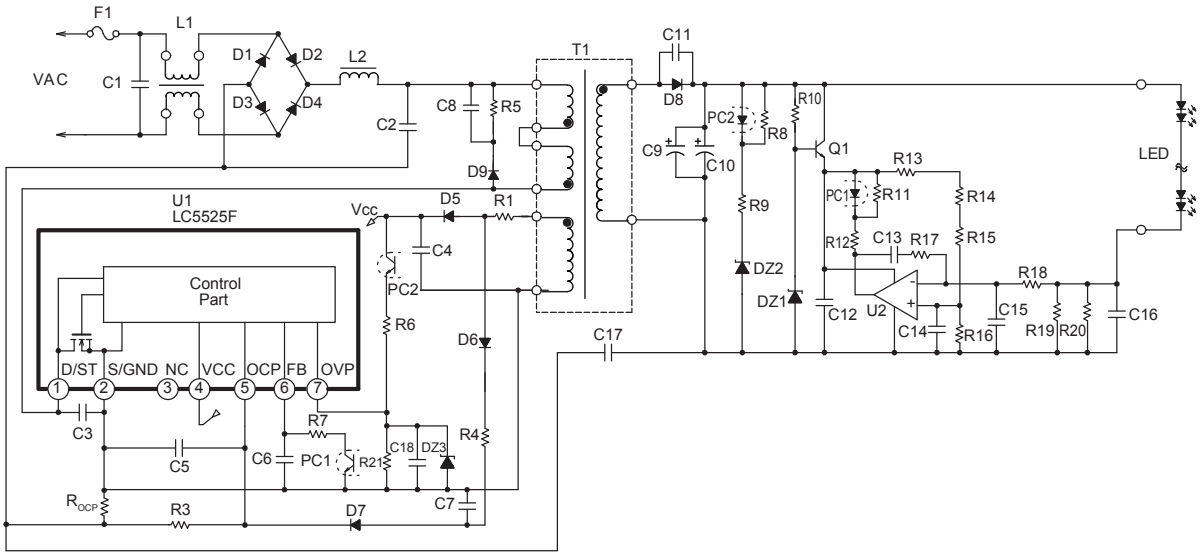

Selection Guide

Part Number	Package
LC5525F	TO-220F (specify leadform when ordering)

The polarity value for current specifies a sink as "+," and a source as "−," referencing the IC.

Absolute Maximum Ratings T_A = 25°C, unless otherwise specified

Characteristic	Symbol	Notes	Pins	Rating	Unit
Drain Current[1]	I_{DPeak}	Single pulse	1 – 2	13.0	A
Single Pulse Avalanche Energy[2]	E_{AS}	I_{LPeak} = 4.4 A, V_{DD} = 99 V, L = 20 mH	1 – 2	233	mJ
Control Part Input Voltage	V_{CC}		4 – 2	35	V
OCP Pin Voltage	V_{OCP}		5 – 2	−2.0 to 5.0	V
FB Pin Voltage	V_{FB}		6 – 2	−0.3 to 7.0	V
OVP Pin Voltage	V_{OVP}		7 – 2	−0.3 to 5.0	V
Allowable Power Dissipation of MOSFET[3]	P_{D1}	With infinite heatsink	1 – 2	23.6	W
		Without heatsink	1 – 2	1.8	W
Internal Frame Temperature in Operation	T_F		—	−20 to 115	°C
Operating Ambient Temperature	T_{OP}		—	−55 to 115	°C
Storage Temperature	T_{stg}		—	−55 to 125	°C
Channel Temperature	T_{ch}		—	150	°C

[1]Refer to MOSFET Safe Operating Area Curve.
[2]Refer to MOSFET Avalanche Energy Derating Coefficient Curve.
[3]Refer to MOSFET Temperature versus Power Dissipation Curve.

ELECTRICAL CHARACTERISTICS of Control Part T_A = 25°C, V_{CC} = 20 V, unless otherwise specified

Characteristic	Symbol	Test Conditions	Pins	Min.	Typ.	Max.	Unit
Startup Operation							
Operation Start Voltage	$V_{CC(ON)}$		4 – 2	13.8	15.1	17.3	V
Operation Stop Voltage*	$V_{CC(OFF)}$		4 – 2	8.4	9.4	10.7	V
Operating Current	$I_{CC(ON)}$		4 – 2	–	–	3.7	mA
Startup Circuit Operation Voltage	$V_{STARTUP}$		1 – 2	42	57	72	V
Startup Current	$I_{CC(STARTUP)}$	V_{CC} = 13 V	4 – 2	−5.5	−3.0	−1.0	mA
Startup Current Threshold Biasing Voltage-1*	$V_{CC(BIAS)1}$		4 – 2	9.5	11.0	12.5	V
Startup Current Threshold Biasing Voltage-2	$V_{CC(BIAS)2}$		4 – 2	14.4	16.6	18.8	V
Normal Operation							
PWM Operation Frequency	f_{OSC}		1 – 2	11.0	14.0	18.0	kHz
Maximum On-Time	$t_{ON(MAX)}$		1 – 2	30.0	40.0	50.0	μs
FB Pin Voltage Minimum Limit	$V_{FB(MIN)}$		6 – 2	0.55	0.90	1.25	V
Maximum Feedback Current	$I_{FB(MAX)}$		6 – 2	−40	−25	−10	μA
Leading Edge Blanking Time	$t_{ON(LEB)}$		5 – 2	−	500	−	ns
Quasi-Resonant Operation Threshold Voltage-1	$V_{BD(TH1)}$		5 – 2	0.14	0.24	0.34	V
Quasi-Resonant Operation Threshold Voltage-2	$V_{BD(TH2)}$		5 – 2	0.12	0.17	0.22	V
Protection Operation							
OCP Pin Overcurrent Protection (OCP) Threshold Voltage	V_{OCP}		5 – 2	−0.66	−0.60	−0.54	V
OCP Pin Source Current	I_{OCP}		5 – 2	−120	−40	−10	μA
OCP Pin Overvoltage Protection (OVP) Threshold Voltage	$V_{BD(OVP)}$		5 – 2	2.2	2.6	3.0	V
Overload Protection (OLP) Threshold Voltage-1	$V_{FB(OLP)1}$		6 – 2	5.0	5.5	6.0	V
Overload Protection (OLP) Threshold Voltage-2	$V_{FB(OLP)2}$		6 – 2	4.1	4.5	4.9	V
OVP Pin OVP Threshold Voltage	$V_{OVP(OVP)}$		7 – 2	1.6	2.0	2.4	V
VCC Pin OVP Threshold Voltage	$V_{CC(OVP)}$		4 – 2	28.5	31.5	34.0	V
Thermal Shutdown Activating Temperature	$T_{J(TSD)}$		–	135	–	–	°C

*$V_{CC(BIAS)1}$ > $V_{CC(OFF)}$ always.

ELECTRICAL CHARACTERISTICS of MOSFET T_A = 25°C, unless otherwise specified

Characteristic	Symbol	Test Conditions	Pins	Min.	Typ.	Max.	Unit
Drain-to-Source Breakdown Voltage	V_{DSS}		1 – 2	650	—	—	V
Drain Leakage Current	I_{DSS}		1 – 2	—	—	300	μA
On Resistance	$R_{DS(on)}$		1 – 2	—	—	1.1	Ω
Switching Time	t_f		1 – 2	—	—	400	ns
Thermal Resistance	$R_{\theta ch\text{-}F}$	Between channel and internal frame	—	—	—	2.2	°C/W

Characteristic Performance

S. O. A. Temperature Derating Coefficient Curve

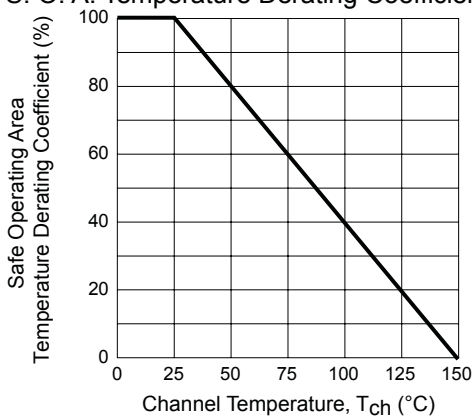

MOSFET Safe Operating Area Curve

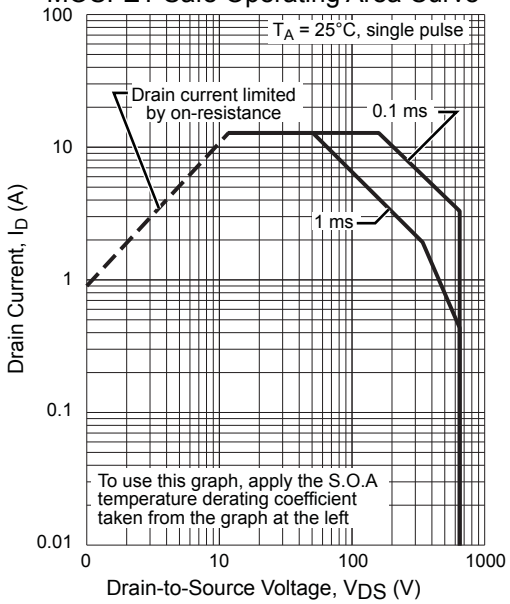

MOSFET Avalanche Energy Derating Coefficient Curve

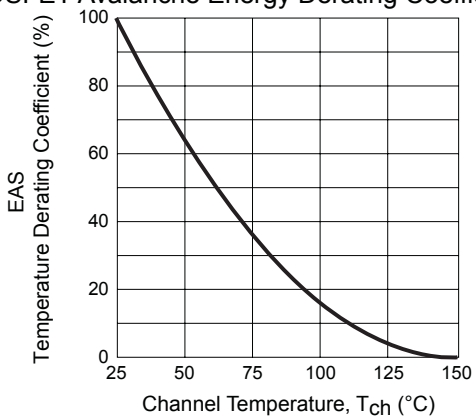

MOSFET Temperature versus Power Dissipation Curve

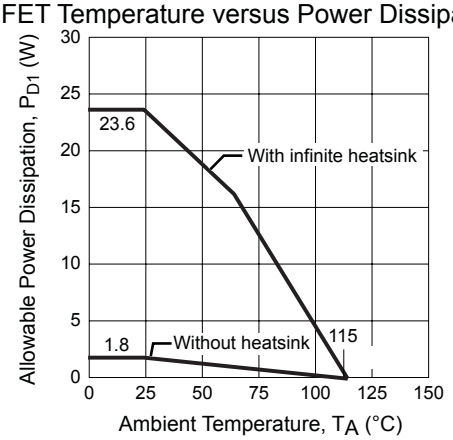

Transient Thermal Resistance Curve

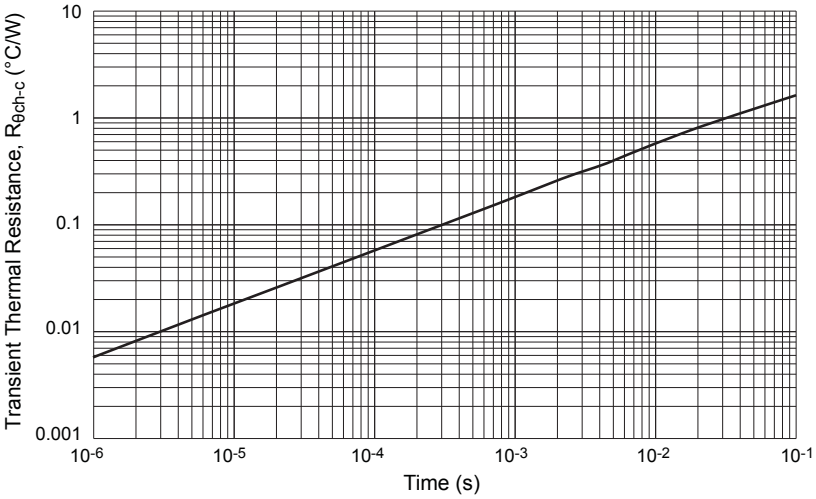

Functional Block Diagram

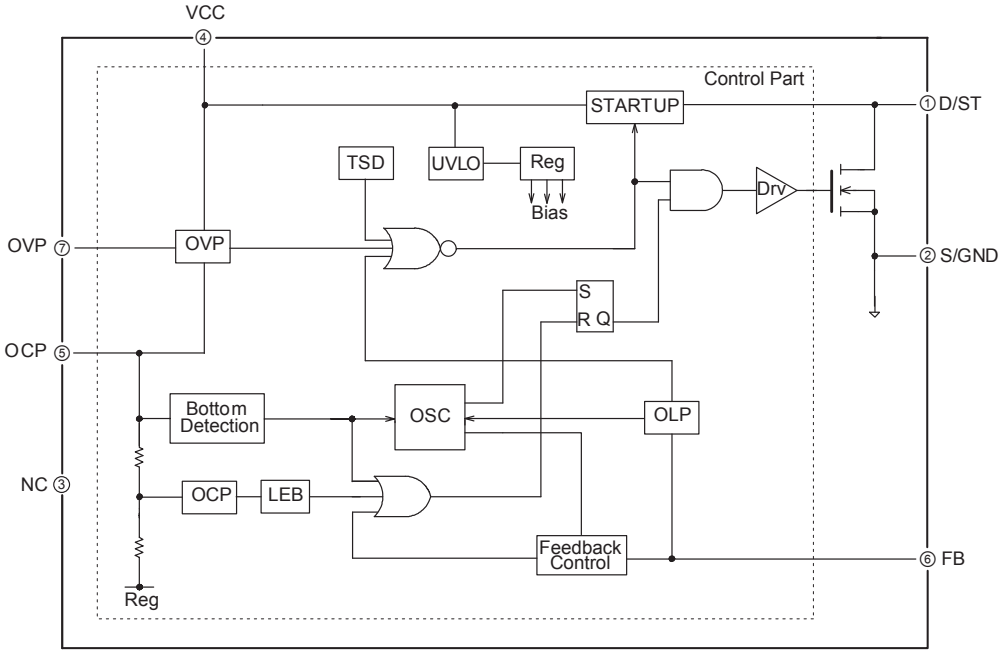

Pin-out Diagrams

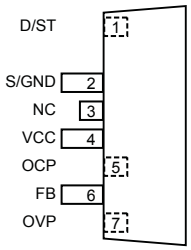

(LF 3051)

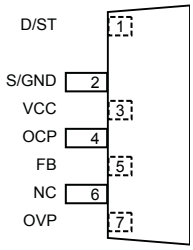

(LF 3052)

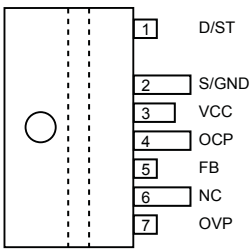

(LF 3054)

LC5525F Pin List Table

Number	Name	Function
1	D/ST	MOSFET drain pin and input of the startup current
2	S/GND	MOSFET source and GND pin for the Control Part
3	NC	No connection
4	VCC	Supply voltage input and Overvoltage protection (OVP) signal input
5	OCP	Overcurrent Protection, quasi-resonant signal input pin, and Overvoltage Protection (OVP) signal input
6	FB	Feedback signal input and Overload Protection (OLP) signal input
7	OVP	Overvoltage Protection (OVP) signal input

Package Outline Drawing, TO-220F Leadform 3051

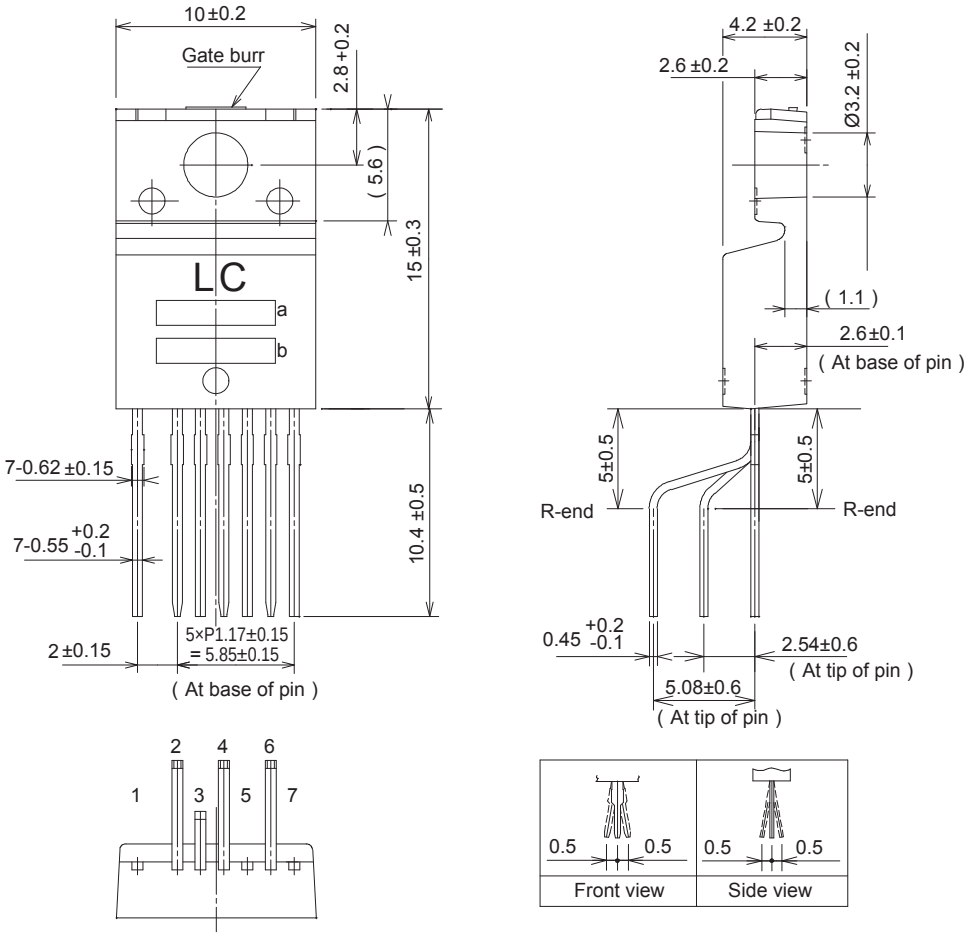

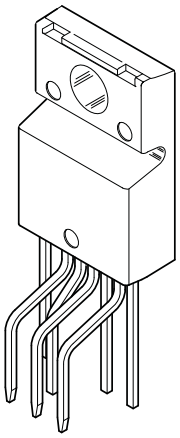

Unit: mm

Package: TO-220F-7L

"Gate Burr" shows area where 0.3 mm (max) gate burr may be present

a: Part # 5525F

b: Lot number

1st letter: Last digit of year

2nd letter: Month

Jan to September: Numeric

October: O

November: N

December: D

3rd and 4th letter: Date

01 to 31: Numeric

5th letter: Sanken control number

Pin treatment Pb-free. Device composition compliant with the RoHS directive.

Package Outline Drawing, TO-220F Leadform 3052

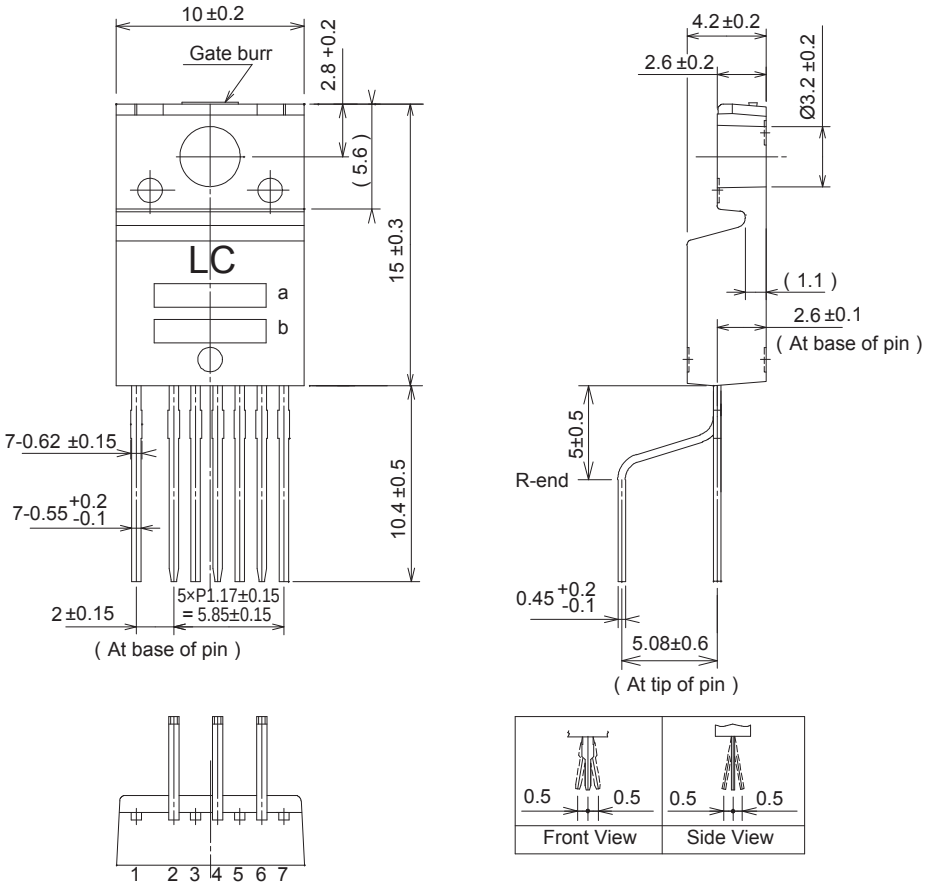

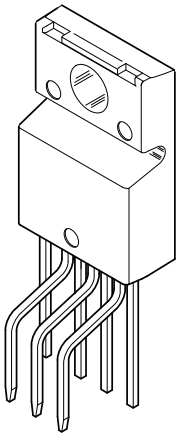

Unit: mm

Package: TO-220F-7L

"Gate Burr" shows area where 0.3 mm (max) gate burr may be present

a: Part # 5525F

b: Lot number

1st letter: Last digit of year

2nd letter: Month

Jan to September: Numeric

October: O

November: N

December: D

3rd and 4th letter: Date

01 to 31: Numeric

5th letter: Sanken control number

Pin treatment Pb-free. Device composition compliant with the RoHS directive.

Package Outline Drawing, TO-220F Leadform 3054

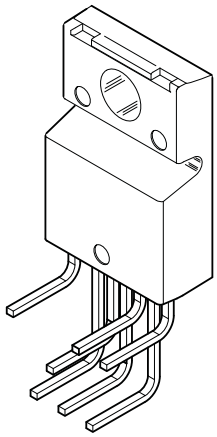

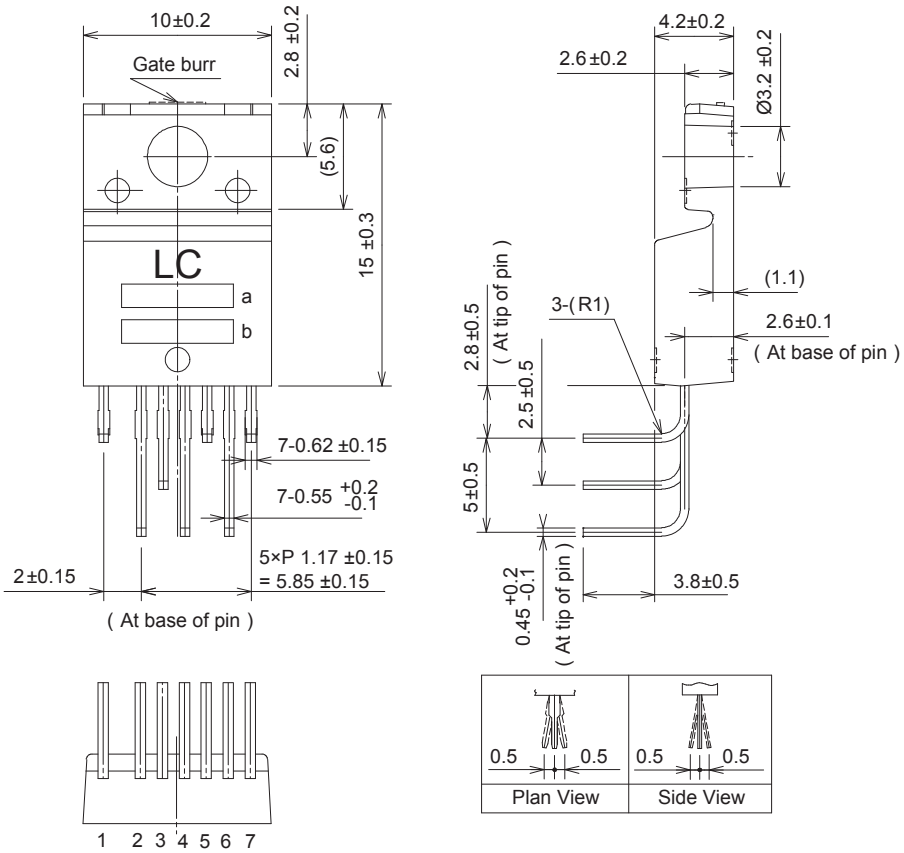

Unit: mm
Package: TO-220F-7L

"Gate Burr" shows area where 0.3 mm (max) gate burr may be present

a: Part # 5525F
b: Lot number
1st letter: Last digit of year
2nd letter: Month
Jan to September: Numeric
October: O
November: N
December: D
3rd and 4th letter: Date
01 to 31: Numeric
5th letter: Sanken control number

Pin treatment Pb-free. Device composition compliant with the RoHS directive.

Because reliability can be affected adversely by improper storage environments and handling methods, please observe the following cautions.

Cautions for Storage

- Ensure that storage conditions comply with the standard temperature (5°C to 35°C) and the standard relative humidity (around 40% to 75%); avoid storage locations that experience extreme changes in temperature or humidity.
- Avoid locations where dust or harmful gases are present and avoid direct sunlight.
- Reinspect for rust on leads and solderability of the products that have been stored for a long time.

Cautions for Testing and Handling

When tests are carried out during inspection testing and other standard test periods, protect the products from power surges from the testing device, shorts between the product pins, and wrong connections. Ensure all test parameters are within the ratings specified by Sanken for the products.

Remarks About Using Silicone Grease with a Heatsink

- When silicone grease is used in mounting the products on a heatsink, it shall be applied evenly and thinly. If more silicone grease than required is applied, it may produce excess stress.
- Volatile-type silicone greases may crack after long periods of time, resulting in reduced heat radiation effect. Silicone greases with low consistency (hard grease) may cause cracks in the mold resin when screwing the products to a heatsink.

  Our recommended silicone greases for heat radiation purposes, which will not cause any adverse effect on the product life, are indicated below:

Type	Suppliers
G746	Shin-Etsu Chemical Co., Ltd.
YG6260	Momentive Performance Materials
SC102	Dow Corning Toray Co., Ltd.

Cautions for Mounting to a Heatsink

- When the flatness around the screw hole is insufficient, such as when mounting the products to a heatsink that has an extruded (burred) screw hole, the products can be damaged, even with a lower than recommended screw torque. For mounting the products, the mounting surface flatness should be 0.05 mm or less.
- Please select suitable screws for the product shape. Do not use a flat-head machine screw because of the stress to the products. Self-tapping screws are not recommended. When using self-tapping screws, the screw may enter the hole diagonally, not vertically, depending on the conditions of hole before threading or the work situation. That may stress the products and may cause failures.
- Recommended screw torque: 0.588 to 0.785 N●m (6 to 8 kgf●cm).
- For tightening screws, if a tightening tool (such as a driver) hits the products, the package may crack, and internal stress fractures may occur, which shorten the lifetime of the electrical elements and can cause catastrophic failure. Tightening with an air driver makes a substantial impact. In addition, a screw torque higher than the set torque can be applied and the package may be damaged. Therefore, an electric driver is recommended.

  When the package is tightened at two or more places, first pre-tighten with a lower torque at all places, then tighten with the specified torque. When using a power driver, torque control is mandatory.

Soldering

- When soldering the products, please be sure to minimize the working time, within the following limits:

  260±5°C 10±1 s (Flow, 2 times)

  380±10°C 3.5±0.5 s (Soldering iron, 1 time)
- Soldering should be at a distance of at least 2.0 mm from the body of the products.

Electrostatic Discharge

- When handling the products, the operator must be grounded. Grounded wrist straps worn should have at least 1 MΩ of resistance from the operator to ground to prevent shock hazard, and it should be placed near the operator.
- Workbenches where the products are handled should be grounded and be provided with conductive table and floor mats.
- When using measuring equipment such as a curve tracer, the equipment should be grounded.
- When soldering the products, the head of soldering irons or the solder bath must be grounded in order to prevent leak voltages generated by them from being applied to the products.
- The products should always be stored and transported in Sanken shipping containers or conductive containers, or be wrapped in aluminum foil.

- The contents in this document are subject to changes, for improvement and other purposes, without notice. Make sure that this is the latest revision of the document before use.
- Application and operation examples described in this document are quoted for the sole purpose of reference for the use of the products herein and Sanken can assume no responsibility for any infringement of industrial property rights, intellectual property rights or any other rights of Sanken or any third party which may result from its use.
- Although Sanken undertakes to enhance the quality and reliability of its products, the occurrence of failure and defect of semiconductor products at a certain rate is inevitable. Users of Sanken products are requested to take, at their own risk, preventative measures including safety design of the equipment or systems against any possible injury, death, fires or damages to the society due to device failure or malfunction.
- Sanken products listed in this document are designed and intended for the use as components in general purpose electronic equipment or apparatus (home appliances, office equipment, telecommunication equipment, measuring equipment, etc.).

  When considering the use of Sanken products in the applications where higher reliability is required (transportation equipment and its control systems, traffic signal control systems or equipment, fire/crime alarm systems, various safety devices, etc.), and whenever long life expectancy is required even in general purpose electronic equipment or apparatus, please contact your nearest Sanken sales representative to discuss, prior to the use of the products herein.

  The use of Sanken products without the written consent of Sanken in the applications where extremely high reliability is required (aerospace equipment, nuclear power control systems, life support systems, etc.) is strictly prohibited.
- In the case that you use Sanken products or design your products by using Sanken products, the reliability largely depends on the degree of derating to be made to the rated values. Derating may be interpreted as a case that an operation range is set by derating the load from each rated value or surge voltage or noise is considered for derating in order to assure or improve the reliability. In general, derating factors include electric stresses such as electric voltage, electric current, electric power etc., environmental stresses such as ambient temperature, humidity etc. and thermal stress caused due to self-heating of semiconductor products. For these stresses, instantaneous values, maximum values and minimum values must be taken into consideration.

  In addition, it should be noted that since power devices or IC's including power devices have large self-heating value, the degree of derating of junction temperature affects the reliability significantly.
- When using the products specified herein by either (i) combining other products or materials therewith or (ii) physically, chemically or otherwise processing or treating the products, please duly consider all possible risks that may result from all such uses in advance and proceed therewith at your own responsibility.
- Anti radioactive ray design is not considered for the products listed herein.
- Sanken assumes no responsibility for any troubles, such as dropping products caused during transportation out of Sanken's distribution network.
- The contents in this document must not be transcribed or copied without Sanken's written consent.