Package Drawing

Designator: KH
Type: 3-Pin SIP

For Reference Only – Not for Tooling Use

(Reference Allegro DWG-0000541, Rev. 1)
Dimensions in millimeters – NOT TO SCALE
Dimensions exclusive of mold flash, gate burrs, and dambar protrusions
Exact case and lead configuration at supplier discretion within limits shown

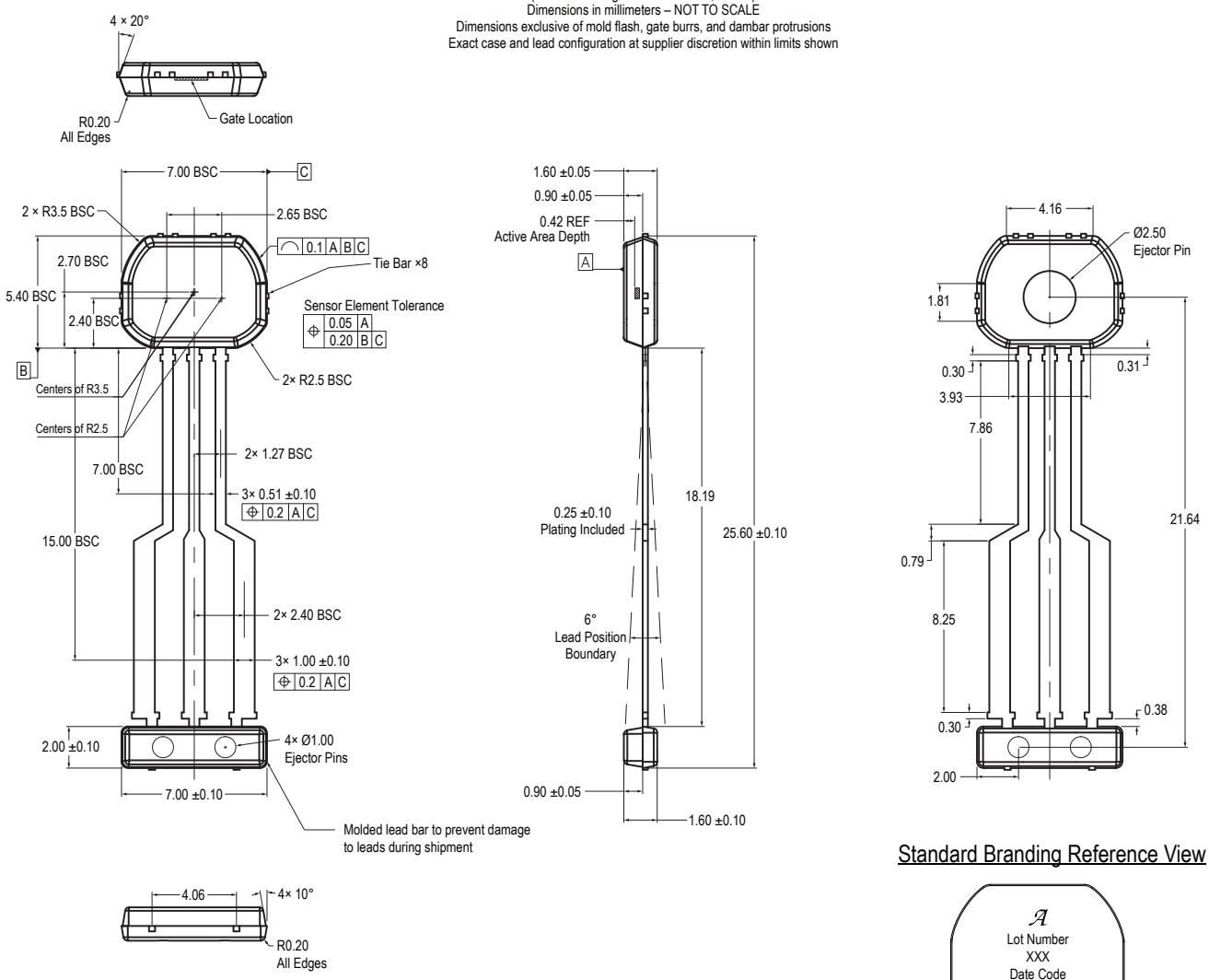

Standard Branding Reference View

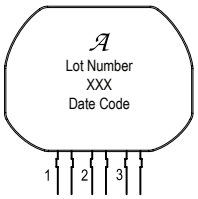

Line 1, 2, 3, 4: Max. 10 characters per line

Line 1: Logo A
Line 2: 7-digit alpha numeric Lot Number
Line 3: Last 3 digits of Part Number;
Additional suffixes may be added
to Part Number as required
Line 4: 4-digit Date Code

Branding scale and appearance at supplier discretion

Copyright 2021, Allegro MicroSystems. Drawings are for reference only; not for tooling use. Refer to the individual datasheet for information on a specific product package. Allegro MicroSystems reserves the right to make, from time to time, such departures from the detail specifications as may be required to permit improvements in the performance, reliability, or manufacturability of its products. Before placing an order, the user is cautioned to verify that the information being relied upon is current. The information included herein is believed to be accurate and reliable. However, Allegro MicroSystems assumes no responsibility for its use; nor for any infringement of patents or other rights of third parties which may result from its use. Copies of this document are considered uncontrolled documents.